DATASHEET

ACT SAS-SUPERFLEX PUR SHIELDED
M12D 4-pin male – RJ45

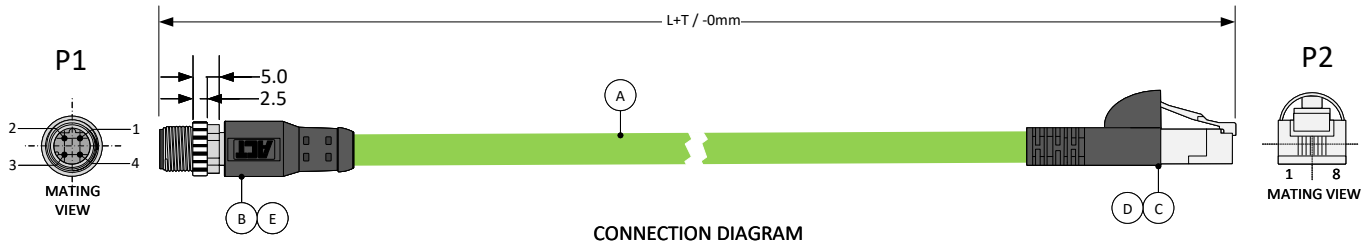

CONNECTION DIAGRAM

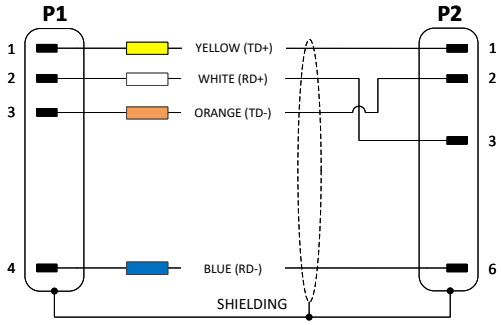

ELECTRICAL TEST:
1: 100% TEST OPEN SHORT MIS-WIRE
2: CONTACT RESISTANCE 3Ω MAX
3: INSULATION RESISTANCE: 5MΩ MIN
4: HI-POT 300V DC/10MS

A	UL20549, 22#*4C(19*0.15BA)+FAB, OD:7.0mm, GREEN PUR JACKET – CONFORM TO PROFINET SPECIFICATION
B	M12D 4P MALE+HEXAGON NUT – BLACK INSULATOR
C	RJ45 8P4C MALE (METAL SHIELD, PIN GOLD PLATED)
D	30P BLACK PVC
E	45P BLACK PVC

ITEM NO.	LENGTH(mm)	TOLERANCE ±/mm
SC4408	500	30
SC4409	1000	30
SC4406	1500	50
SC4410	2000	80
SC4407	3000	100
SC4411	4000	150
SC4400	5000	200
SC4412	5500	200
SC4413	6000	
SC4414	6500	
SC4415	7000	
SC4416	7500	
SC4417	8000	
SC4418	8500	

ITEM NO.	LENGTH(mm)	TOLERANCE ±/mm
SC4401	9000	
SC4419	9500	
SC4402	10000	
SC4420	12500	
SC4403	15000	
SC4421	17500	
SC4404	20000	
SC4405	25000	
SC4422	30000	
SC4423	35000	
SC4424	40000	
SC4425	45000	
SC4426	50000	
SC4427	55000	

ITEM NO.	LENGTH(mm)	TOLERANCE ±/mm
SC4428	60000	

WIRE SPECIFICATIONS

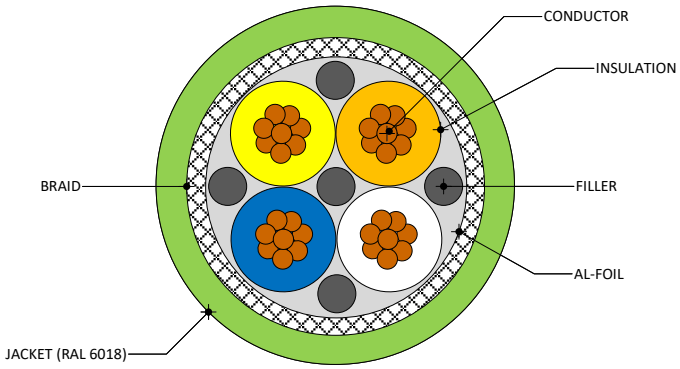

UL20549,AWG22/19 BA*4C+FAB

CONDUCTOR	AWG	22	
	MATERIAL	BA	
	COND.SIZE (mm)	19/0.15 ± 0.008	
INSULATION	MATERIAL	HDPE	
	DIAMETER (mm)	1.6 ± 0.08	
	AVG.THICK (mm)	-	
	COLOR	Yellow,White, Orange,Blue	
	TWISTED (mm)	-	
DRAIN WIRE	AWG	-	
	MATERIAL	-	
	COND.SIZE (mm)	-	
	DIAMETER (mm)	-	
FACE OUTSIDE AL.MYLAR	COVERAGE (%)	100%	
	OVERLAP (%)	≥25%	
BRAID	MATERIAL	TA	
	CONSTRUCTION	**16*8/0.10 ± 0.08mm**	
	COVERAGE (%)	**-**	
JACKET	**MATERIAL**	**PUR**	
	COLOR	**GREEN**	RAL: 6018
	(mm) MIN.THICK	0.38	
	(mm) AVG THICK		
	(mm) DIAMETER	**7.0 ± 0.2**	

BEND RADIUS (FIXED)	5 X OUTER Ø
BEND RADIUS (MOVING)	10 X OUTER Ø
NO. OF BENDING CYCLES (C-TRACK)	MAX. 1 Mio. (25°C)
TORSION STRESS	± 270°/m
NO. OF TORSION CYCLES	MAX. 3 Mio. (25°C)

NOMINAL VOLTAGE	300V
TEST VOLTAGE	500V
TEMPERATURE RANGE FIXED	-5°C > 80°C
TEMPERATURE RANGE MOBILE	-5°C > 40°C
INSULATION VOLTAGE	600V

MARKING	ACT SAS-SUPERFLEX – AWG22/19*4C - E119932-Y AWM20549 80°C – 300V / ISOLATED-600V

CREATION DATE:	9-6-2023
REVISION DATE:	26-10-2023
REVISION:	V1.00
PRINT DATE:	26-10-2023