C 100.7 / C 105.7 / C 110 .7
C 110.7 X-TRA (C 110.7 NZ)
C 120.7 / C 120.7 X-TRA, C 125.7 / C 125.7 X-TRA

Instructions for use

EN
03.2018

Nilfisk®

The instruction consists of 3 parts. Part 1:3 Safety Instructions. Part 2:3 User Guide. Part 3:3 Technical Data and Declaration.

Part 1:3 - Safety Instructions

Before first use of the machine, read the instructions carefully. Save instructions for later use.

Safety instructions marked with this symbol must be observed to prevent personal injury or serious damage to property.

WARNING

⚠ This machine has been designed for use with cleaning agents supplied or recommended by Nilfisk. The use of other cleaning agents or chemicals may adversely affect the safety of the machine.

⚠ High pressure jets can be dangerous if subject to misuse. The jet must not be directed at persons, live electrical equipment or the machine itself.

⚠ Do not use the machine within range of persons unless they wear protective clothes.

⚠ Do not direct the jet against yourself or others in order to clean footwear.

⚠ Risk of explosion – Do not spray flammable liquids.
⚠ High pressure washers shall not be used by children or untrained personnel.

⚠ High pressure hoses, fittings and couplings are important for the safety of the machine. Use only hoses, fittings and couplings recommended by Nilfisk.

⚠ To ensure machine safety, use only original spare parts recommended by Nilfisk.

⚠ Water that has flown through back-flow preventers is considered to be non-potable.

⚠ Don't use the machine if a supply cord or important parts of the machine are damaged, e.g. safety devices, high pressure hoses, trigger gun.

⚠ Inadequate extension cords can be dangerous. If an extension cord is used, it shall be suitable for outdoor use, and the connection has to be kept dry and off the ground. It is recommended that this is accomplished by a cord reel which keeps the socket at least 60 mm above the ground.

⚠ Switch off and unplug the machine when leaving it unattended, when finished using it or when converting it to another function, when doing repair and maintenance.

⚠ During use of high pressure washers, aerosols may be formed. Inhalation of aerosols can be hazardous to health, for the protection against aerosols a respiratory mask of class FFP 2 or equivalent may be needed, depending on the cleaning environment.

Intended Use and Terms of Liability

- The C-, D-, E- and P-series have been developed for domestic cleaning purposes only and for use in an upright position. Any other use is considered as improper use.
- A high pressure washer operates with different levels of pressure and cleaning detergents for various cleaning tasks and results. Always follow instructions on detergents for use, emergency and disposal.
- Do not operate the machine at temperatures below 0°C. Never start a frozen machine, never use it indoor and never cover it during use. This is considered improper and wrongful use. Use of wrongful pressure, detergent and/or applications may cause damage to machine, surfaces, material and devices.

All of the above is considered improper and wrongful use. Nilfisk accepts no liability for any damage resulting from any improper or wrongful use.

Please refer to our website at www.get-started.nilfisk.com for further instructions and information on use, emergency and disposal.

Safety devices and their functioning

The machine automatically stops when releasing the trigger. The machine will start again when reactivating the trigger. The spray handle features a locking device. When activated, the spray handle cannot be operated.

The machine has an automatic self-resetting thermal protector. If the machine is overheated, the thermal protector will cut the power supply. In this case, wait for the machine to cool down. An integrated hydraulic safety valve protects the system from excessive pressure.

Precautions

The electric supply connection shall be made by a qualified electrician and comply with IEC 60364-1. It is recommended that the electric supply to this machine should include either a residual current device that will interrupt the supply if the leakage current to earth exceeds 30 mA for 30 ms or a device that will prove earth circuit.

- Use motor start/delayed fuses with characteristic D according to IEC 947-2 or corresponding standards outside IEC.
- If the supply cord is damaged, it must be replaced by an authorized Nilfisk distributor or similar qualified person in order to avoid a hazard.
- No actions needed for adjusting machines marked with dual voltage and frequency.

- Supervise children not to play with the machine.
- The operator and any one in the immediate vicinity of the site for cleaning should take action to protect oneself from being struck by debris dislodged during operation.
- Always wear safety boots, respiratory mask, ear protection, goggles and protective clothing during operation.
- The high pressure generated by the machine is a particular source of danger. Hold the spray lance firmly with both hands. The spray lance is affected by a kickback force and a sudden torque during operation.
- See PART 3:3 for the actual size of the kickback force.
- During transportation: Position the machine horizontally on the backside and secure with straps.

Within EU

- High pressure washers shall not be used nor maintained by children. The machine can be used by people with reduced physical, sensory or mental capabilities or lack of experience and knowledge if given supervision or instructions concerning use of the machine in a safe way and understands the hazards involved.

Outside EU

- High pressure washers shall not be used nor maintained by children or untrained people or people with reduced physical, sensory or mental capabilities or lack of experience and knowledge.

Part 2:3 - User Guide

Provides a general overview of the machine and operation elements along with illustrated sections on preparation, operation, water connection, storage, and user maintenance.

A Unpacking and preparing for use

Follow illustrations in A.

B Connection to potable water mains

High pressure washers are not suitable for connection to the potable water mains. Always check national regulations before connecting the machine to potable water mains and use a back-flow preventer if required.

- Use ½" garden hose, 10-25 m.
- Follow illustrations in B.

C Connection to other water sources

You can connect the machine to e.g. rain water vessels, rivers, lakes and cisterns etc. and operate it in suction mode. Follow illustrations in C.

D Pairing of spray handle and machine

C-PG and D-PG series only. After battery insert, D1.1, you have 2 min. to pair spray handle and machine. The light will flash orange when searching for the machine. When paired, the light will turn off. Follow illustrations D1.1 to D1.5. If pairing aborts, do pairing according to illustrations D2.1 to D2.5. Power regulation is indicated by green light, see illustration D3.1 and D3.2.

E Leaving the machine unattended > 5 min.

⚠ See listed warnings. Follow the illustrations in E.

F After use and storage

After use always: Turn off the machine. Empty machine and accessories of water to avoid frost damage. Remove the plug from socket. Disconnect water inlet hose. Wind up electrical cable and high pressure hose to avoid damage of cable, high pressure hose and fittings. Storage of machine shall be frost free.

- Follow illustrations in F.

G Maintenance, inspection and repair

Maintenance of the machine should always be done when starting up after long time of storage.

⚠ Before use, always inspect the machine and equipment for damages. In case of damages, act according to listed warnings.

- Do not attempt any maintenance not described in the instructions. If the machine refuses to start, stops, pulsates, pressure fluctuates, motor buzzes, fuse blows or no water comes out, check the trouble shooting diagram at our website www.get-started.nilfisk.com. Any repair should always be made in Nilfisk authorized workshop with original Nilfisk spare parts.
- User maintenance according to illustrations in G.

Part 2:3 - User Guide

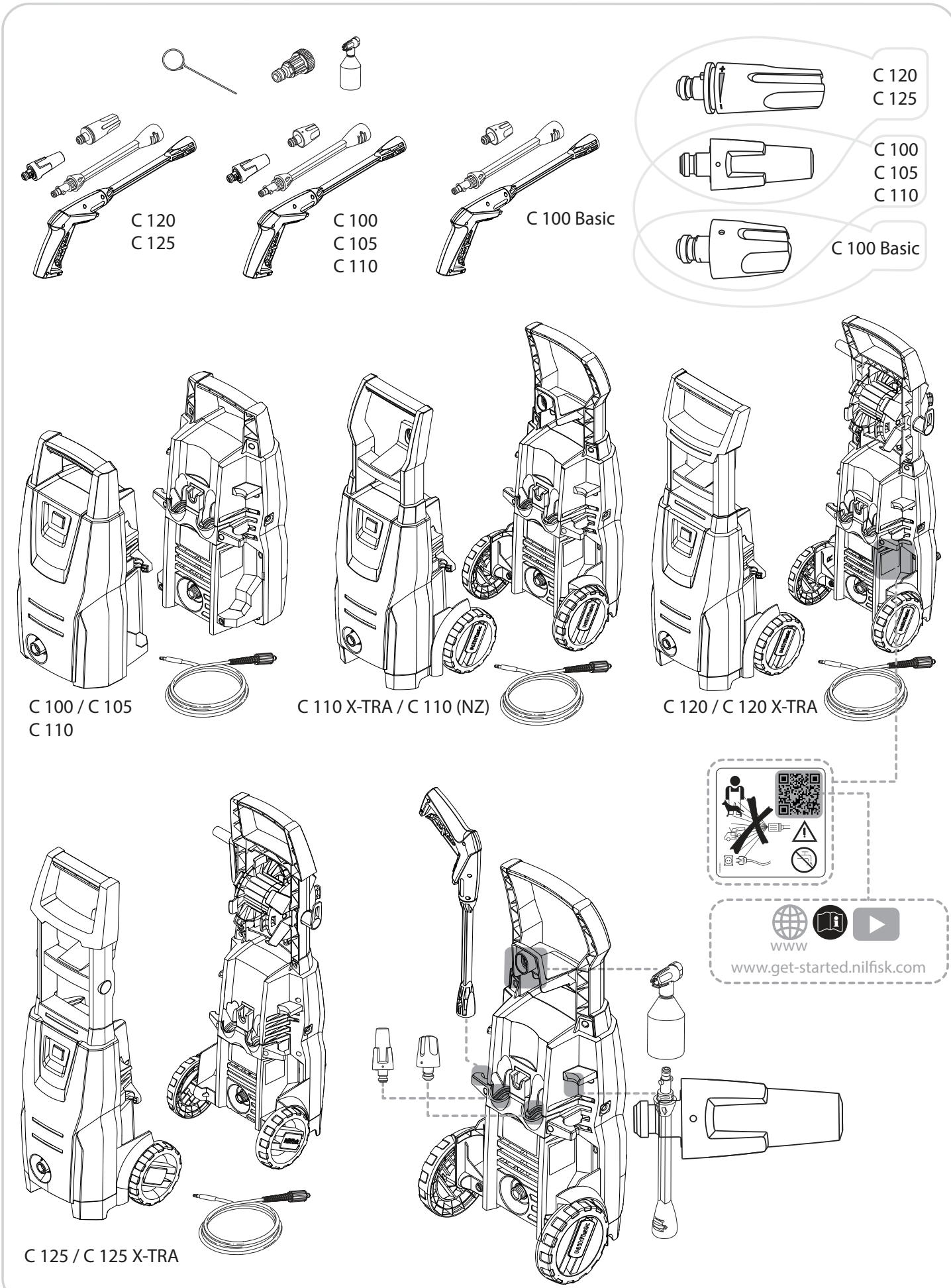

A

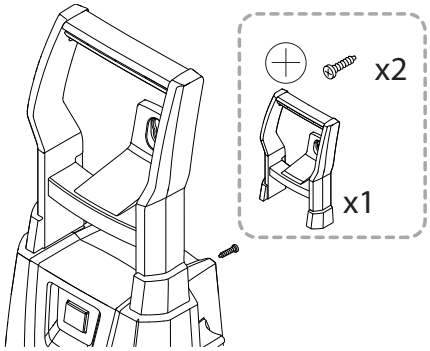

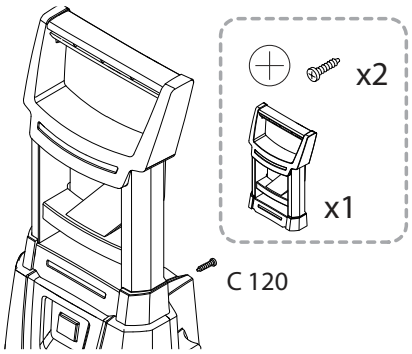

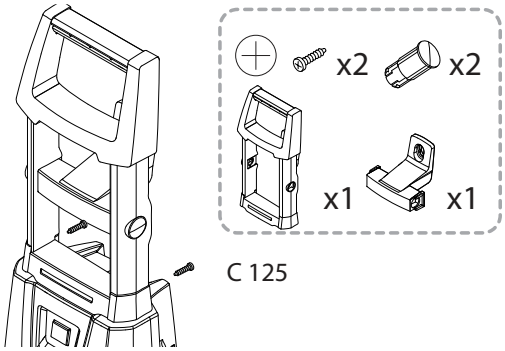

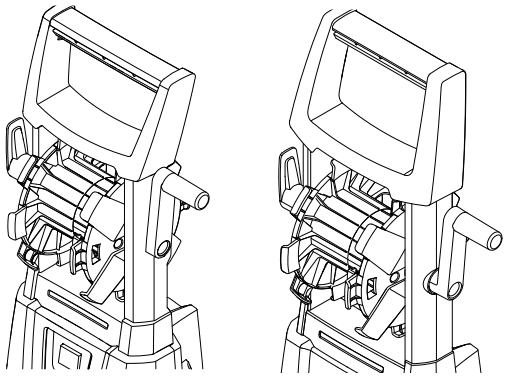

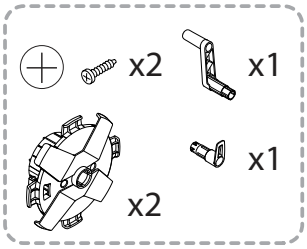

C 120 X-TRA / C 125 X-TRA

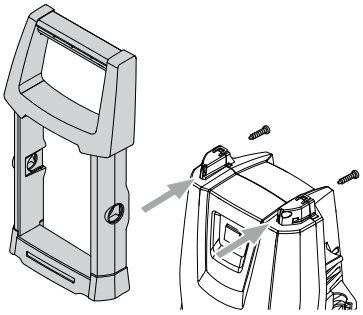

A1.1

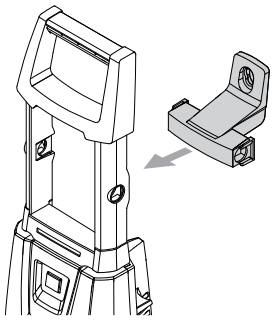

A1.2

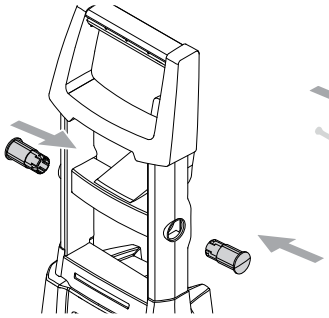

A1.3

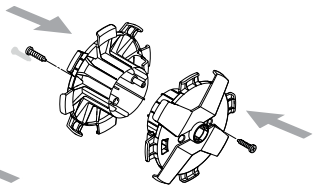

A1.4

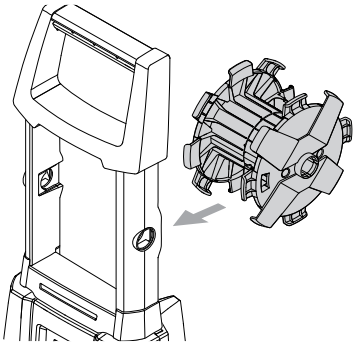

A1.5

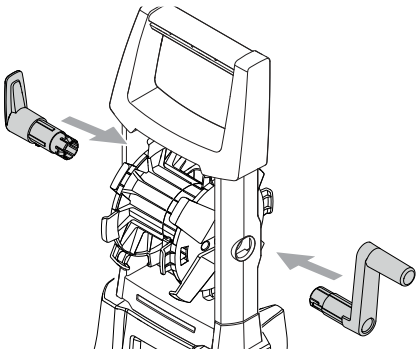

A1.6

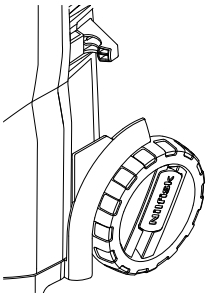

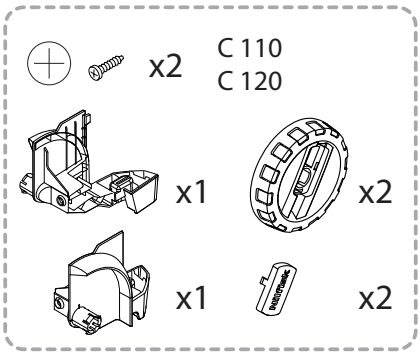

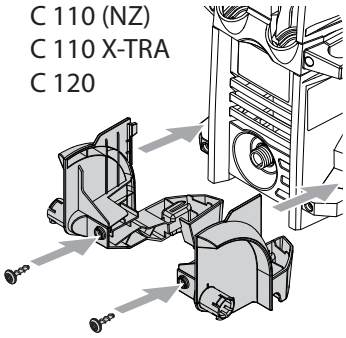

A2.1

A

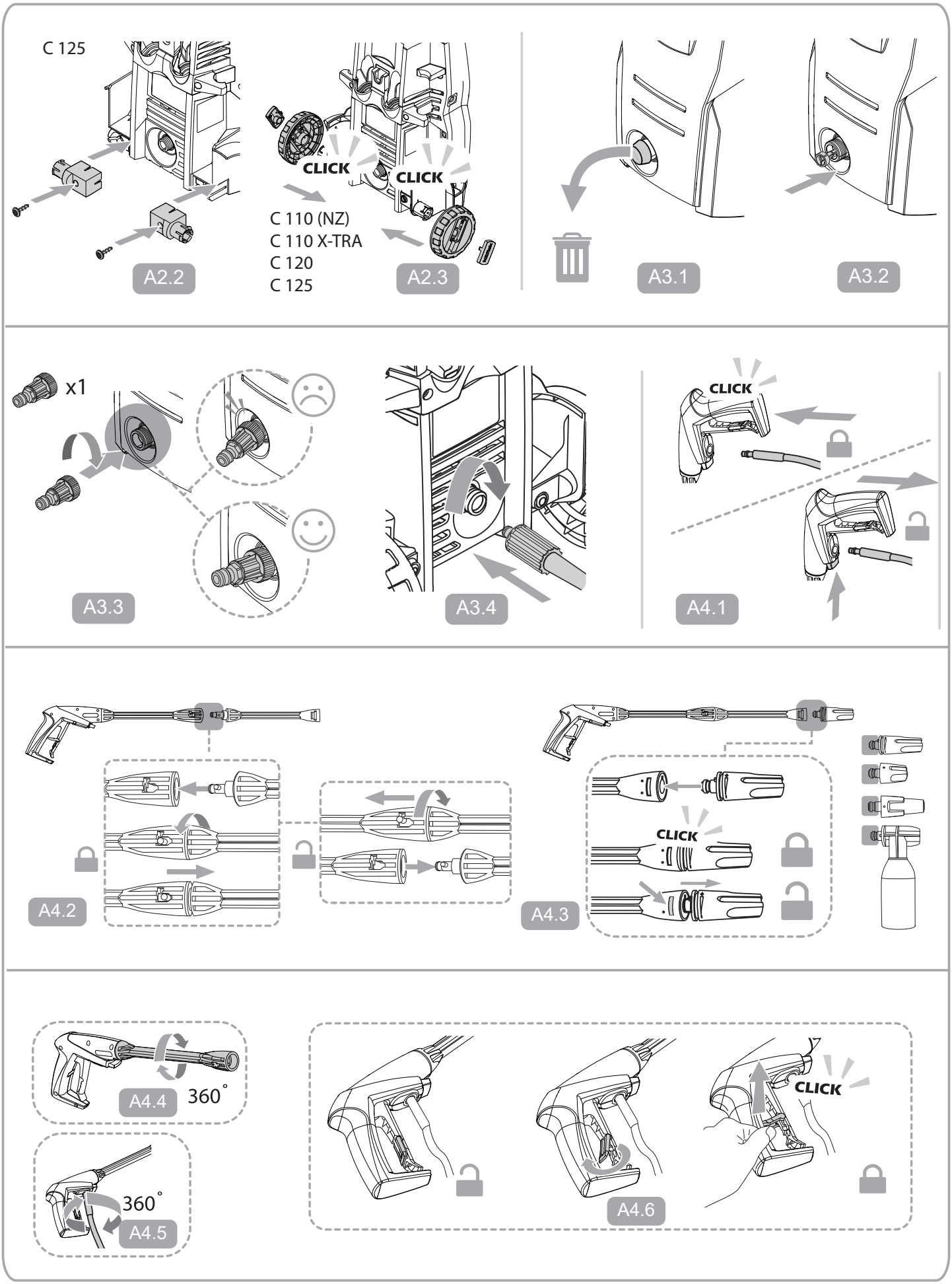
C 125
A2.2
CLICK
CLICK
C 110 (NZ)
C 110 X-TRA
C 120
C 125
A2.3
A3.1
A3.2
x1
A3.3
A3.4
CLICK
A4.1
A4.2
CLICK
A4.3
A4.4
360˚
360˚
A4.5
CLICK
A4.6

B

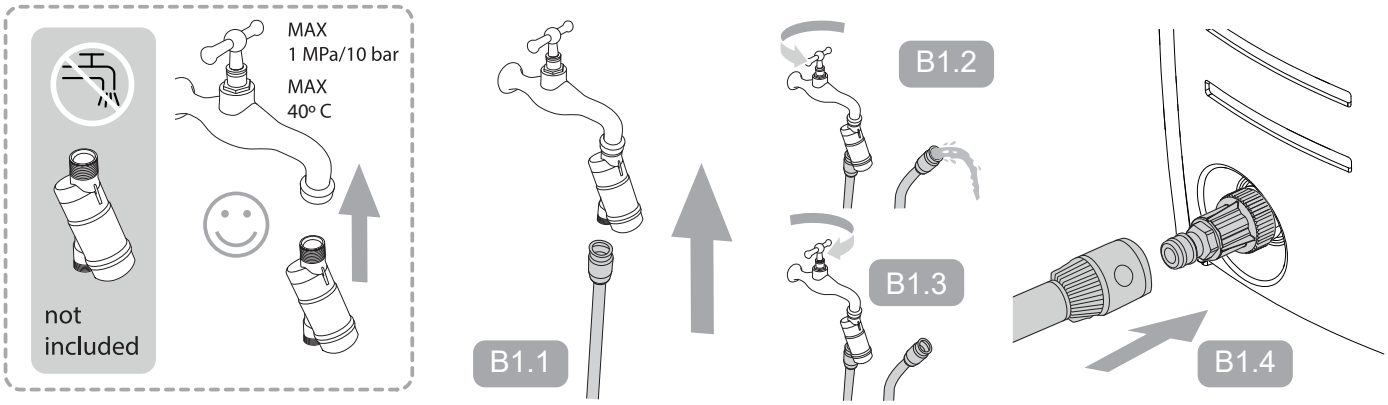
MAX
1 MPa/10 bar
MAX
40º C
not
included
B1.1
B1.2
B1.3
B1.4

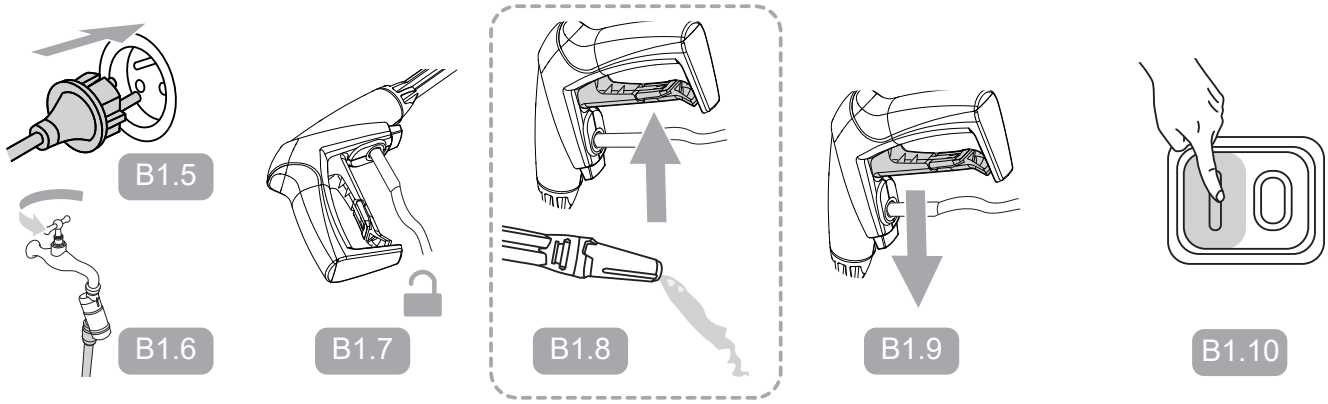
B1.5
B1.6
B1.7
B1.8
B1.9
B1.10

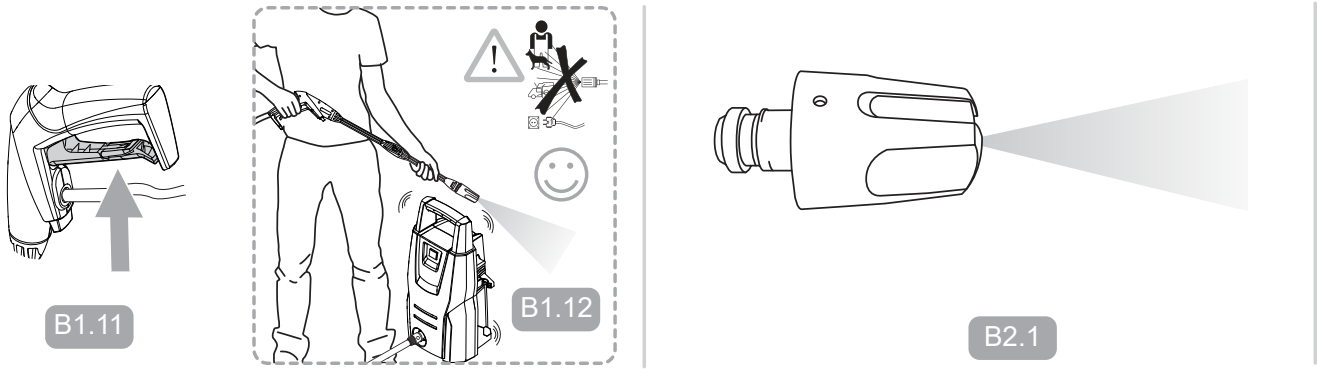
B1.11
B1.12
B2.1

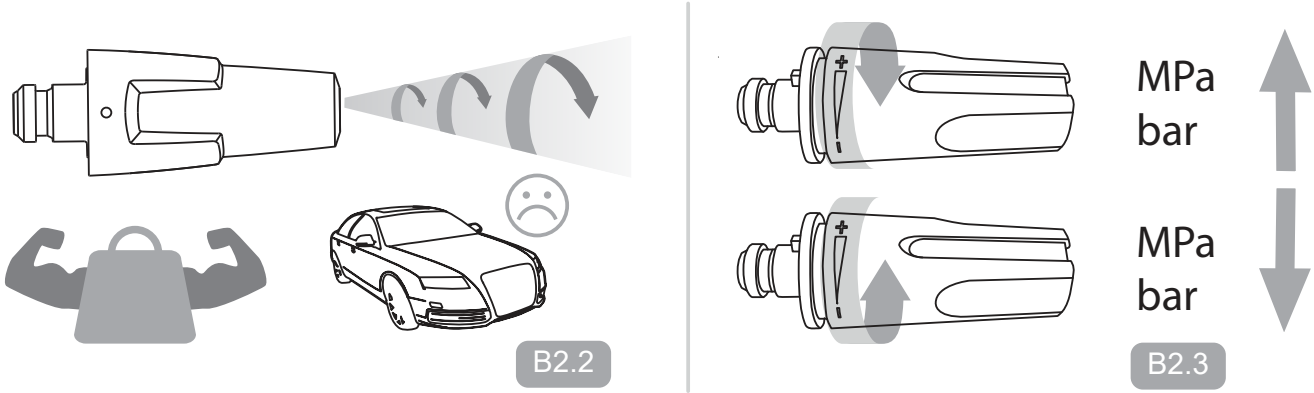
B2.2
MPa
bar
MPa
bar
B2.3

C

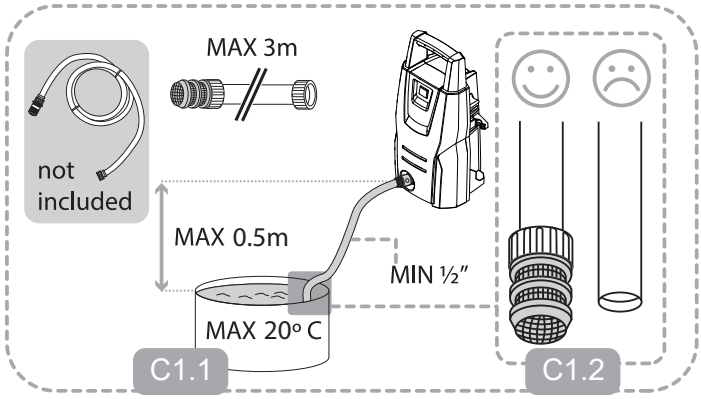

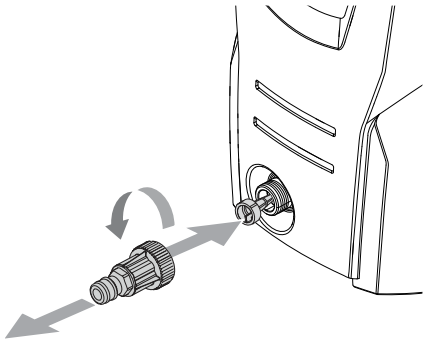

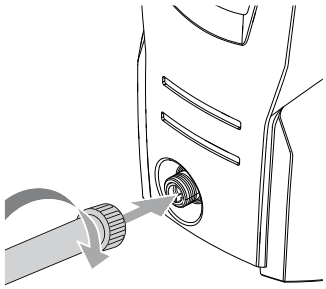

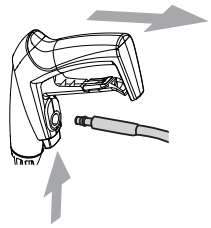

C1.3

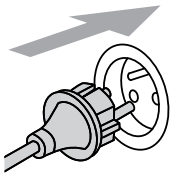

C1.4

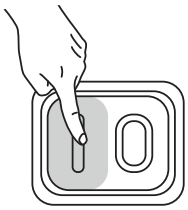

C1.5

C1.6

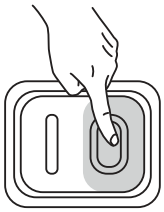

C1.7

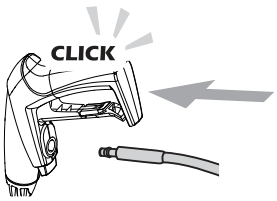

C1.8

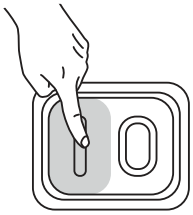

C1.9

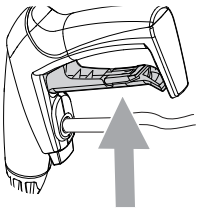

C1.10

D

C 100 - C 125
series

E

E1.1

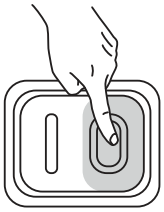

E1.2

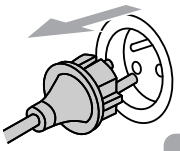

E1.3

E1.4

F

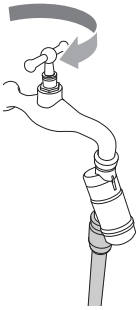

F1.1

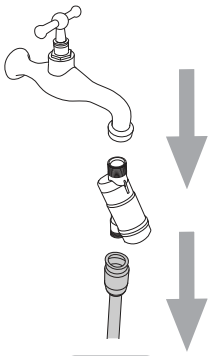

F1.2

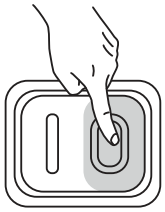

F1.3

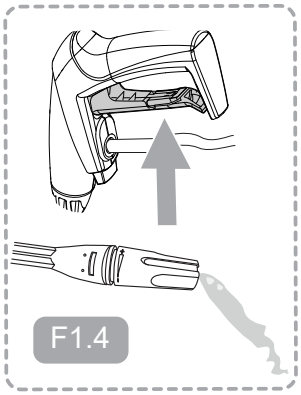

F1.4

F1.5

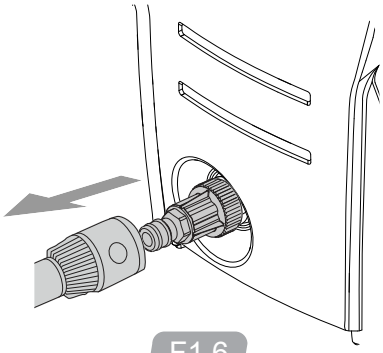

F1.6

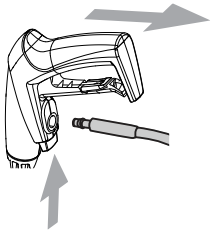

F1.7

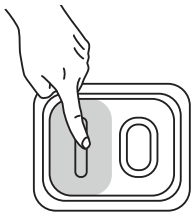

F1.8

F

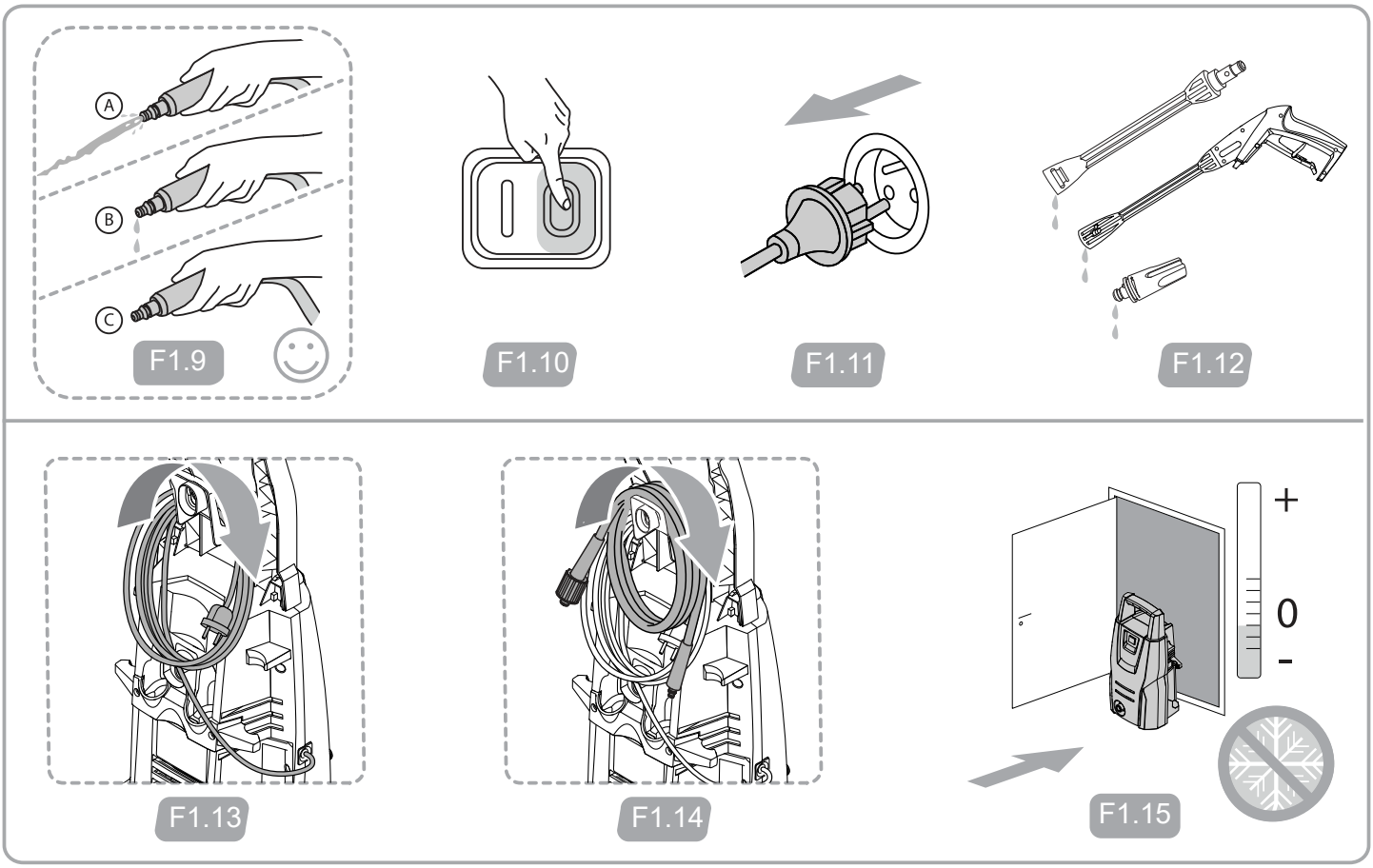

G

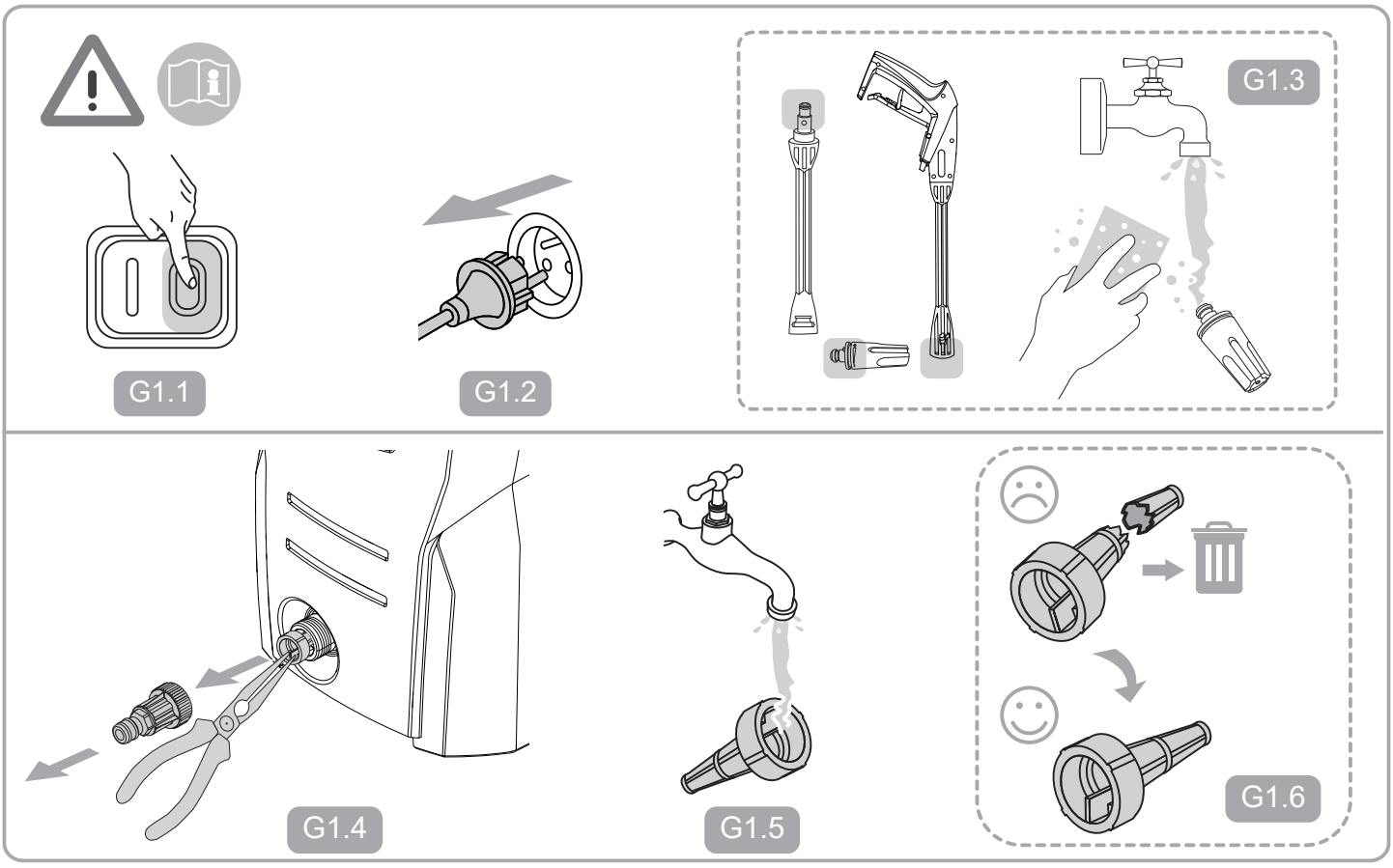

G

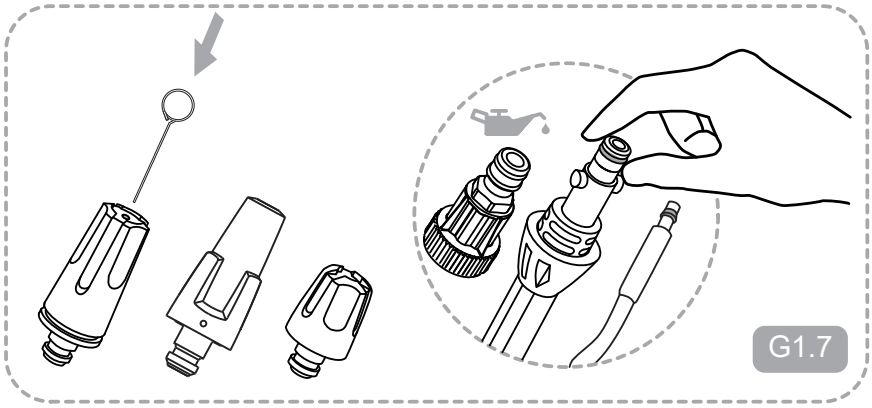

H

128500938
Super Foam Sprayer

106411177
BA-Valve

128500673
Inlet Suction Hose

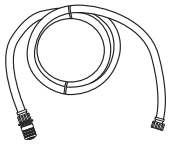

6411131
Click&Clean
Auto Brush

6411135
Click&Clean
Underchassis Nozzle

6411136
Click&Clean
Auto Nozzle

6410762
Rotary Brush

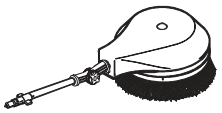

128470456
Multi Brush

128470459
Multi Brush
Kit

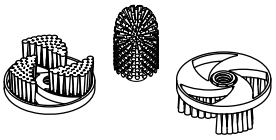

128500955
Power Patio

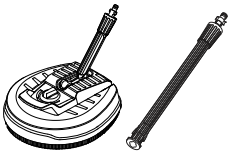

128500702
Patio

6410766
Drain & Tube
Cleaner - 15 m

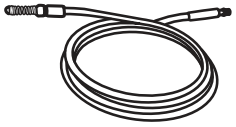

128470040
Roof Cleaner

126411387
Wall Bracket

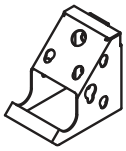

Part 3:3 - Technical Data and Declaration of Conformity

Technical Data

		C 100.7	C 105.7	C 110.7 C 110.7 (NZ) C 110.7 X-TRA	C 120.7	C 120.7 X-TRA	C 125.7	C 125.7 X-TRA
Electric specifications	Unom	220-240 V						
	fnom	50/60 Hz						
	P	1.3 kW	1.4 kW				1.5 kW	
	Inom	6 A					6.5 A	
Protection Class	Class I/ Class II	Class II						
Protection degree	IP XX	IP X5						
Hydraulic specifications	p_{nom}	7 MPa / 70 bar	7.5 MPa / 75 bar	8 MPa / 80 bar	8.5 MPa / 85 bar		9.5 MPa / 95 bar	
	p_{max}	10 MPa / 100 bar	10.5 MPa / 105 bar	11 MPa / 110 bar	12 MPa / 120 bar		12.5 MPa / 125 bar	
	Q	5.2 l/min / 310 l/h					5.4 l/min / 320 l/h	
	Q_{max}	7.3 l/min / 440 l/h					7.7 l/min / 460 l/h	
Max. water inlet pressure	$p_{inlet\ max}$	1 Mpa / 10 bar						
Max water inlet temperature	$t_{inlet\ max}$	40° C						
Max water inlet temp. suction mode	$t_{inlet\ max}$	20° C						
Kick-back force	$F_{kickback}$	< 20N						
Weight	$M_{machine}$	5.1 kg		5.1 kg (C 110.7) / 6 kg	6.2 kg	6.4 kg		6.6 kg
Hand-arm vibration according to: Standard nozzle	a_{ha}	< 2.5 ± 1 m/s2						
Sound pressure level LpA	LpA-standard	69.2 ± 3 dB(A)		71.2 ± 3 dB(A)	71.8 ± 3 dB(A)		69.9 ± 3 dB(A)	
Guaranteed sound power level LWA	LwA-standard	84 dB(A)		86 dB(A)	85 dB(A)		85 dB(A)	

We reserve the right to make alterations.

EU / UE / EL / EC / EE / ES / EÚ / AB

Declaration of Conformity
Prohlášení o shodě
Konformitätserklärung
Overensstemmelseserklæring
Declaración de conformidad
Vastavusdeklaratsioon
Déclaration de conformité
Vaatimustenmukaisuusvakuutus
Декларация за съответствие
Δήλωση συμμόρφωσης
Megfelelősségi nyilatkozat
Izjava o sukladnosti
Dichiarazione di conformità
Atitikties deklaracija
Atbilstības deklarācija
Samsvarserklæring
Conformiteitsverklaring
Declaração de conformidade
Deklaracja zgodności
Declaratie de conformitate
Декларация о соответствии
Försäkran om överensstämmelse
Vyhlásenie o zhode
Izjava o skladnosti
Uygunluk beyanı

Manufacturer / Výrobce / Hersteller / Fabrikant / Fabricante / Κατασκευαστής / Gyártó / Proizvođač / Fabbricante / Gamintojas / Ražotājs / Produsent / Fabrikant / Fabricante / Producent / Producător / производитель / Tillverkaren / Výrobca / Proizvajalec/ Üretici firma:	**Nilfisk A/S, Kornmarksvej 1** **DK-2605 Broendby, DENMARK**
Product / Produkt / Producto, Toode, Produit, Tuote/ Продукт / Προϊόν / Termék / Proizvod / Prodotto / Produktas / Produkts / Artikel / Produtos / Produs / Izdelek / Ürün	**C100.7, C105.7, C110.7, C120.7, C125.7**
Description / Popis / Beschreibung / Beskrivelse / Descripción / Kirjeldus / La description / Kuvaus / Описание / Περιγραφή / Leirás / Opis / Descrizione / Aprašymas / Apraksts / Beschrijving / Descrição / Descriere / Beskrivning / Popis / Açıklama	**HPW - Consumer** **220-240V 50/60Hz, IPX5**

EN **We, Nilfisk hereby declare under our sole responsibility, that the above mentioned product(s) is/are in conformity with the following directives and standards.**

CS My, Nilfisk prohlašujeme na svou výlučnou odpovědnost, že výše uvedený výrobek je ve shodě s následujícími směrnicemi a normami.

DE Wir, Nilfisk erklären in alleiniger Verantwortung, dass das oben genannte Produkt den folgenden Richtlinien und Normen entspricht.

DA Vi, Nilfisk erklærer hermed under eget ansvar at ovennævnte produkt(er) er i overensstemmelse med følgende direktiver og standarder.

ES Nosotros, Nilfisk declaramos bajo nuestra única responsabilidad que el producto antes mencionado está en conformidad con las siguientes directivas y normas

ET Meie, Nilfisk Käesolevaga kinnitame ja kanname ainuisikulist vastutust, et eespool nimetatud toode on kooskõlas järgmiste direktiivide ja

FR Nilfisk déclare sous notre seule responsabilité que le produit mentionné ci-dessus est conforme aux directives et normes suivantes.

FI Me, Nilfisk täten vakuutamme omalla vastuulla, että edellä mainittu tuote on yhdenmukainen seuraavien direktiivien ja standardien mukaisesti

BG Ние, Nilfisk С настоящото декларираме на своя лична отговорност, че посочените по-горе продуктът е в съответствие със следните директиви и стандарти.

EL Εμείς, Nilfisk δηλώνουμε με αποκλειστική μας ευθύνη, ότι το προαναφερόμενο προϊόν συμμορφώνεται με τις ακόλουθες οδηγίες και πρότυπα.

HU Mi, Nilfisk Kijelentjük, egyedüli felelősséggel, hogy a fent említett termék megfelel az alábbi irányelveknek és szabványoknak

HR Mi, Nilfisk Izjavljujemo pod punom odgovornošću, da gore navedeni proizvod u skladu sa sljedećim direktivama i standardima.

IT Noi, Nilfisk dichiara sotto la propria responsabilità, che il prodotto di cui sopra è conforme alle seguenti direttive e norme.

LT Mes, "Nilfisk pareiškiu vienašališkos atsakomybės, kad pirmiau minėtas produktas atitinka šias direktyvas ir standartus

LV Mēs, Nilfisk šo apliecinu ar pilnu atbildību, ka iepriekš minētais produkts atbilst šādām direktīvām un standartiem

NO Vi, Nilfisk erklærer herved under eget ansvar, at det ovennevnte produktet er i samsvar med følgende direktiver og standarder

NL We verklaren Nilfisk hierbij op eigen verantwoordelijkheid, dat het bovengenoemde product voldoet aan de volgende richtlijnen en normen

PT Nós, a Nilfisk declaramos, sob nossa exclusiva responsabilidade, que o produto acima mencionado está em conformidade com as diretrizes e normas a seguir.

PL My, Nilfisk Niniejszym oświadczamy z pełną odpowiedzialnością, że wyżej wymieniony produkt jest zgodny z następującymi dyrektywami i normami..

RO Noi, Nilfisk Prin prezenta declarăm pe propria răspundere, că produsul mai sus menționat este în conformitate cu următoarele standarde și directive.

RU Ми, Нилфиск овим изјављујем под пуном одговорношћу, да наведеног производ је у складу са следећим директивама и стандардима.

SV Vi Nilfisk förklarar härmed under eget ansvar att ovan nämnda produkt överensstämmer med följande direktiv och normer.

SK My, Nilfisk prehlasujeme na svoju výlučnú zodpovednosť, že vyššie uvedený výrobok je v zhode s nasledujúcimi smernicami a normami.

SL Mi, Nilfisk izjavljamo s polno odgovornostjo, da je zgoraj omenjeni izdelek v skladu z naslednjimi smernicami in standardi.

TR Nilfisk, burada yer alan tüm sorumluluklarımıza göre, yukarıda belirtilen ürünün aşağıdaki direktifler ve standartlara uygun olduğunu beyan ederiz.

2006/42/EC	**EN 60335-1:2012+A11:2014** **EN 60335-2-79:2012**
2014/30/EU	**EN 55014-1:2006+A1:2009+A2:2011** **EN 55014-2:2015** **Compliance to harmonic current emissions are documented in TCF_42331_01** **EN 61000-3-3:2013**
2011/65/EU	**EN 50581:2012**
2000/14/EC – Conformity assessment procedure according to Annex V.	**- Measured sound power level: 81-83 dB(A); Guaranteed sound power level: 84-86 dB(A)**

Authorized signatory: Esben Graff, Vice President Portfolio Management, Consumer

March 13, 2018

HEAD QUARTER

DENMARK
Nilfisk A/S
Kornmarksvej 1
DK-2605 Broendby
Tel.: (+45) 4323 8100
Website: www.nilfisk.com

SALES COMPANIES

ARGENTINA
Nilfisk srl.
Edificio Central Park
Herrera 1855, 6th floor/604
Ciudad de Buenos Aires
Tel.: (+54) 11 6091 1571
Website: www.consumer.nilfisk.com.ar

AUSTRALIA
Nilfisk Pty Ltd
Unit 1/13 Bessemer Street
Blacktown NSW 2148
Tel.: (+61) 2 98348100
Website: www.consumer.nilfisk.com.au

AUSTRIA
Nilfisk GmbH
Metzgerstrasse 68
5101 Bergheim bei Salzburg
Tel.: (+43) 662 456 400 90
Website: www.nilfisk.at

BELGIUM
Nilfisk n.v-s.a.
Riverside Business Park
Boulevard Internationalelaan 55
Bâtiment C3/C4 Gebouw
Bruxelles 1070
Tel.: (+32) 24 67 60 50
Website: www.consumer.nilfisk.be

Brazil
Nilfisk do Brasil
Av. Eng. Luis Carlos Berrini, 550
40 Andar, Sala 03
SP - 04571-000 Sao Paulo
Tel.: (+11) 3959-0300 / 3945-4744
Website: www.nilfisk.com.br

CANADA
Nilfisk Canada Company
240 Superior Boulevard
Mississauga, Ontario L5T 2L2
Tel.: (+1) 800-668-8400
Website: www.nilfisk.ca

CHILE
Nilfisk S.A. (Comercial KCS Ltda)
Salar de Llamara 822
8320000 Santiago
Tel.: (+56) 2684 5000
Website: www.nilfisk.cl

CHINA
Nilfisk
4189 Yindu Road
Xinzhuang Industrial Park
201108 Shanghai
Tel.: (+86) 21 3323 2000
Website: www.nilfisk.cn

CZECH REPUBLIC
Nilfisk s.r.o.
VGP Park Horní Počernice
Do Čertous 1/2658
193 00 Praha 9
Tel.: (+420) 244 090 912
Website: www.consumer.nilfisk.cz

DENMARK
Nilfisk Danmark A/S
Industrivej 1
Hadsund, DK-9560
Tel.: 72 18 21 20
Website: www.consumer.nilfisk.dk

FINLAND
Nilfisk Oy Ab
Koskelontie 23 E
02920 Espoo
Tel.: (+358) 207 890 600
Website: www.consumer.nilfisk.fi

FRANCE
Nilfisk SAS
26 Avenue de la Baltique
Villebon sur Yvette
91978 Courtaboeuf Cedex
Tel.: (+33) 169 59 87 24
Website: www.consumer.nilfisk.fr

GERMANY
Nilfisk GmbH
Guido-Oberdorfer-Straße 2-10
89287 Bellenberg
Tel.: (+49) (0)7306/72-444
Website: www.consumer.nilfisk.de

GREECE
Nilfisk A.E.
Αναπαύσεως 29
Κορωπί Τ.Κ. 194 00
Tel.: (30) 210 9119 600
Website: www.consumer.nilfisk.gr

HOLLAND
Nilfisk B.V.
Versterkerstraat 5
1322 AN Almere
Tel.: (+31) 036 5460760
Website: www.consumer.nilfisk.nl

HONG KONG
Nilfisk Ltd.
2001 HK Worsted Mills
Industrial Building
31-39, Wo Tong Tsui St.
Kwai Chung, N.T.
Tel.: (+852) 2427 5951
Website: www.nilfisk.com

HUNGARY
Nilfisk Kft.
II. Rákóczi Ferenc út 10
2310 Szigetszentmiklós-Lakihegy
Tel.: (+36) 24 475 550
Website: www.nilfisk.hu

INDIA
Nilfisk India Limited
Pramukh Plaza, 'B' Wing, 4th floor, Unit No. 403
Cardinal Gracious Road, Chakala
Andheri (East) Mumbai 400 099
Tel.: (+91) 22 6118 8188
Website: www.nilfisk.in

IRELAND
Nilfisk
1 Stokes Place
St. Stephen's Green
Dublin 2
Tel.: (+35) 3 12 94 38 38
Website: www.nilfisk.ie

ITALY
Nilfisk SpA
Strada Comunale della Braglia, 18
26862 Guardamiglio (LO)
Tel.: (+39) (0) 377 414021
Website: www.nilfisk.it

JAPAN
Nilfisk Inc.
1-6-6 Kita-shinyokohama, Kouhoku-ku
Yokohama, 223-0059
Tel.: (+81) 45548 2571
Website: www.nilfisk.com

MALAYSIA
Nilfisk Sdn Bhd
Sd 33, Jalan KIP 10
Taman Perindustrian KIP
Sri Damansara
52200 Kuala Lumpur
Tel.: +603 6275 3120
Website: www.nilfisk.com

MÉXICO
Nilfisk de México S. de R.L. de C.V.
Pirineos 515, Int. 60-70
Zona Industrial Benito Juárez
Queretaro, QRO, CP 76120
Tel.: (+52) (442) 427 77 91
Website: www.nilfisk.com

NEW ZEALAND
Nilfisk Limited
Suite F, Building E
42 Tawa Drive
0632 Albany Auckland
Tel.: (+64) 9 414 1996
Website: www.nilfisk.com

NORWAY
Nilfisk AS
Bjørnerudveien 24
1266 Oslo
Tel.: (+47) 22 75 17 80
Website: www.consumer.nilfisk.no

PERU
Nilfisk S.A.C.
Calle Boulevard 162, Of. 703, Lima 33- Perú
Lima
Tel.: (511) 435-6840
Website: www.nilfisk.com

POLAND
Nilfisk Sp. Z.O.O.
Millenium Logistic Park
ul. 3 Maja 8, Bud. B4
05-800 Pruszków
Tel.: (+48) 22 738 3750
Website: www.consumer.nilfisk.pl

PORTUGAL
Nilfisk Lda.
Sintra Business Park
Zona Industrial Da Abrunheira
Edificio 1, 1° A
P2710-089 Sintra
Tel.: (+351) 21 911 2670
Website: www.nilfisk.pt

RUSSIA
Nilfisk LLC
Vyatskaya str. 27, bld. 7/1st
127015 Moscow
Tel.: (+7) 495 783 9602
Website: www.consumer.nilfisk.ru

SINGAPORE
Den-Sin
22 Tuas Avenue 2
639453 Singapore
Tel.: (+65) 6268 1006
Website: www.densin.com

SLOVAKIA
Nilfisk s.r.o.
Bancíkovej 1/A
SK-821 03 Bratislava
Tel.: (+421) 910 222 928
Website: www.consumer.nilfisk.sk

SOUTH AFRICA
Nilfisk (Pty) Ltd
Kimbult Office Park, 9 Zeiss Road
Laser Park, Honeydew
Johannesburg
Tel.: (+27) 118014600
Website: www.nilfisk.co.za

SOUTH KOREA
Nilfisk Korea
3F Duksoo B/D, 317-15
Sungsoo-Dong 2Ga
Sungdong-Gu, Seoul
Tel.: (+82) 2497 8636
Website: www.nilfisk.co.kr

SPAIN
Nilfisk S.A.U
Paseu del Rengle, 5 Planta. 9-10
08302 Mataró
Tel.: (34) 93 741 2400
Website: www.consumer.nilfisk.es

SWEDEN
Nilfisk AB
Taljegårdsgatan 4
431 53 Mölndal
Tel.: (+46) 31 706 73 00
Website: www.consumer.nilfisk.se

SWITZERLAND
Nilfisk AG
Ringstrasse 19
Kircheberg/Industri Stelz
9500 Wil
Tel.: (+41) 71 92 38 444
Website: www.consumer.nilfisk.ch

TAIWAN
Nilfisk Ltd
Taiwan Branch (H.K)
No. 5, Wan Fang Road
Taipei
Tel.: (+88) 6227 00 22 68
Website: www.nilfisk.tw

THAILAND
Nilfisk Co. Ltd.
89 Soi Chokechai-Ruammitr
Viphavadee-Rangsit Road
Ladyao, Jatuchak, Bangkok 10900
Tel.: (+66) 2275 5630
Website: www.nilfisk.co.th

TURKEY
Nilfisk A.S.
Serifali Mh. Bayraktar Bulv. Sehit Sk. No:7
Ümraniye, 34775 Istanbul
Tel.: +90 216 466 94 94
Website: www.consumer.nilfisk.com.tr

UNITED ARAB EMIRATES
Nilfisk Middle East Branch
SAIF-Zone
P.O. Box 122298
Sharjah
Tel.: (+971) (0) 655-78813
Website: www.nilfisk.com

UNITED KINGDOM
Nilfisk Ltd.
Nilfisk House, Bowerbank Way
Gilwilly Industrial Estate, Penrith
Cumbria CA11 9BQ
Tel: (+44) (0) 1768 868995
Website: www.consumer.nilfisk.co.uk

UNITED STATES
Nilfisk Inc.
14600 21st Avenue North
Plymouth, MN-55447
Tel.: (+1) 800-989-2235
Website: www.nilfisk.com

VIETNAM
Nilfisk Vietnam
No. 51 Doc Ngu Str.
P. Vinh Phúc, Q.Ba Dinh
Hanoi
Tel.: (+84) 761 5642
Website: www.nilfisk.com

Nilfisk®